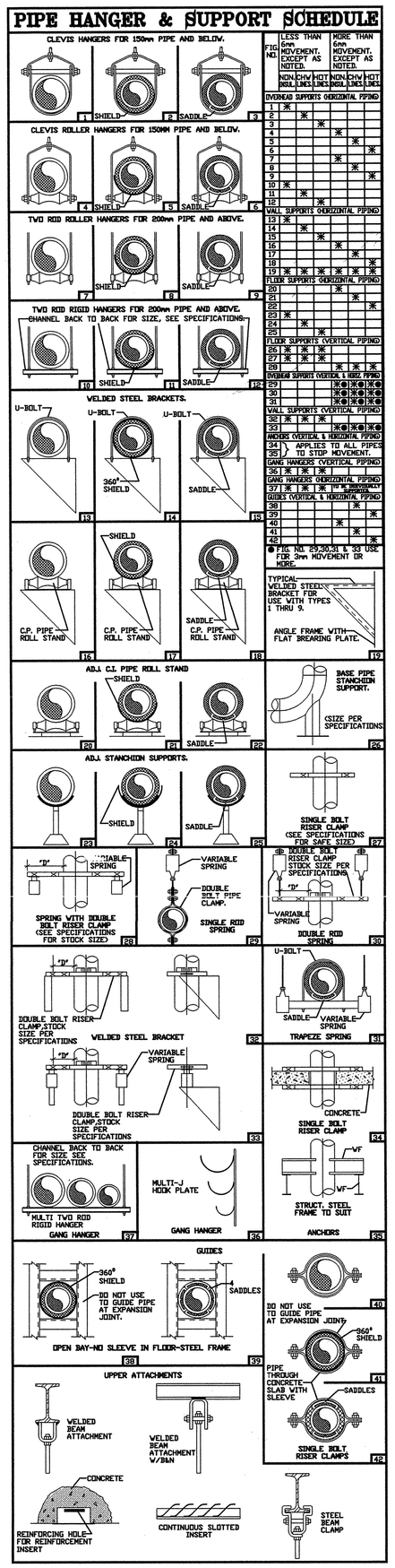

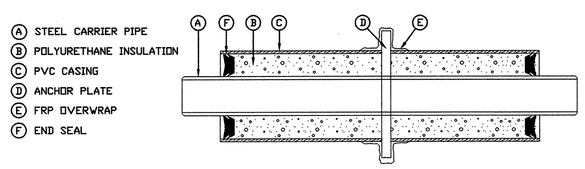

MID-POINT ANCHOR
NO SCALE

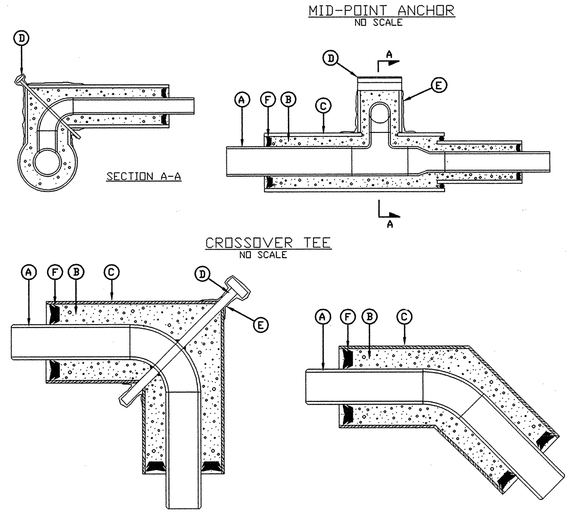

CROSSOVER TEE
NO SCALE

90° ELBOW WITH ANCHOR
NO SCALE

45° ELBOW WITHOUT ANCHOR
NO SCALE

PRE-INSULATED WELD-TITE FITTINGS
NO SCALE

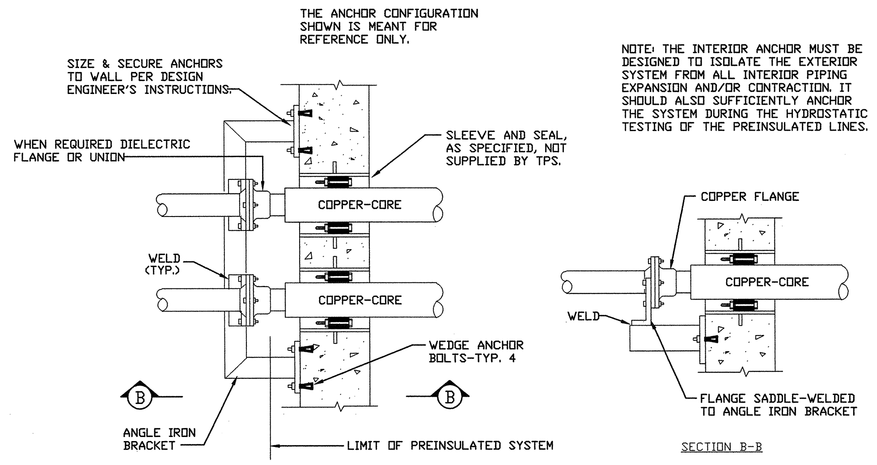

TYPICAL ANCHOR AT WALL PENETRATIONS
NO SCALE

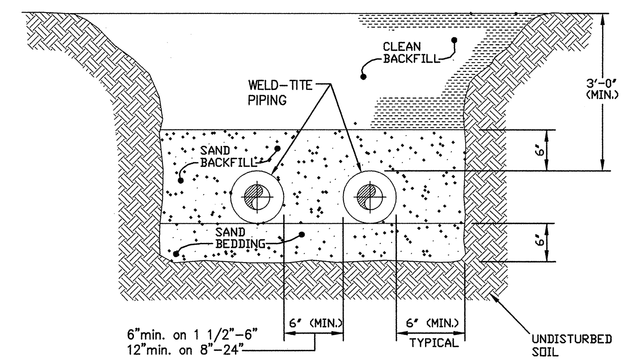

TYPICAL TRENCH SECTION
NO SCALE

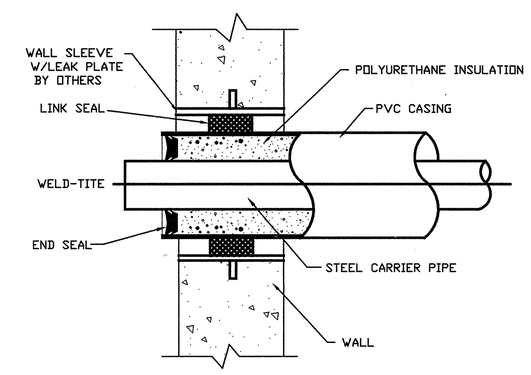

WALL PENETRATION DETAILS
NO SCALE

Ⓐ STEEL CARRIER PIPE
Ⓑ POLYURETHANE INSULATION
Ⓒ PVC CASING
Ⓓ LOOSE FILL INSULATION
Ⓔ GUIDE
Ⓕ END SEAL

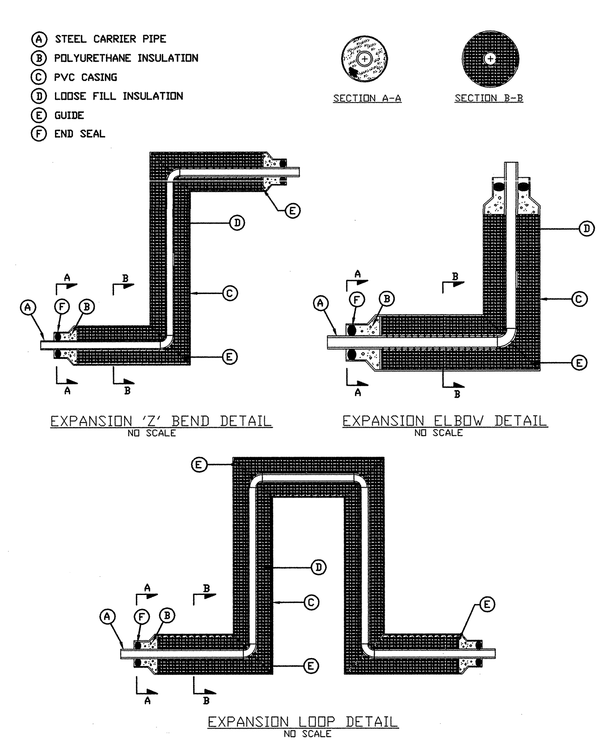

EXPANSION 'Z' BEND DETAIL
NO SCALE

EXPANSION ELBOW DETAIL
NO SCALE

EXPANSION LOOP DETAIL
NO SCALE

PRE-INSULATED WELD-TITE EXPANSION FITTINGS
NO SCALE

SYMBOL LIST

WM	EXISTING WATER MAIN
SS	EXISTING SANITARY SEWER
G	EXISTING GAS MAIN
STM	EXISTING STEAM MAIN
COND	EXISTING CONDENSATE
CHWS	EXISTING CHILLED WATER SUPPLY
CHWR	EXISTING CHILLED WATER RETURN
W	NEW DOMESTIC WATER SERVICE
F	NEW FIRE SERVICE
S	NEW SANITARY SEWER
ST	NEW STORM SEWER
CHWR	NEW CHILLD WATER RETURN
CHWS	NEW CHILLD WATER SUPPLY
STM	NEW STEAM MAIN
COND	NEW CONDENSATE
	MANHOLE
	HOUSE TRAP IN PIT
	VALVE & VALVE BOX
E	ELECTRIC
T	TELEPHONE
INV.EL	INVERT ELEVATION
MH	MANHOLE
	TRUST BLOCK
W.H.	WAII HYDRANT
	EXPANSION JOINT

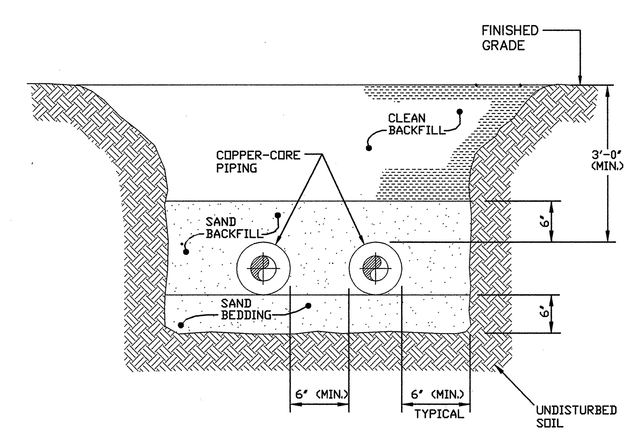

TYPICAL TRENCH SECTION
NO SCALE

M.E. RINKER, Sr. HALL
SCHOOL OF BUILDING CONSTRUCTION
UNIVERSITY OF FLORIDA-GAINESVILLE
PROJECT NO. BR-191

ARCHITECTS
CROXTON COLLABORATIVE/
GOULD EVANS ASSOCIATES

CROXTON COLLABORATIVE ARCHITECTS
475 FIFTH AVENUE
NEW YORK, NY 10017
TEL 212.683.1998
FAX 212.683.2799

GOULD EVANS ASSOCIATES
5405 WEST CYPRESS STREET
TAMPA, FL 33607
TEL 813.288.0729
FAX 813.288.0231

MECHANICAL ENGINEERS
LEHR ASSOCIATES
130 WEST 30TH STREET
NEW YORK, NY 10001-4092
TEL 212.947.8050
FAX 212.967.2059

STRUCTURAL ENGINEERS
WALTER P. MOORE
201 EAST KENNEDY BOULEVARD
TAMPA, FL 33602
TEL 813.221.2424
FAX 813.221.2289

CIVIL ENGINEERS
BROWN & CULLEN, INC.
3530 NW 43 STREET
GAINESVILLE, FL 32605
TEL 352.375.8999
FAX 352.375.0833

LANDSCAPE ENGINEERS
McCLAIN DESIGN GROUP, INC.
1843 NW 39 DRIVE
GAINESVILLE, FL 32605
TEL 352.372.2808
FAX 352.372.6622

CONSULTANT
SEEGY-BISCH
AUSSERE SULZBACHER STR. 118
NURNBERG, GERMANY
TEL 0911/59 90 99
FAX 0911/59 98 05

THIS DRAWING, AS AN INSTRUMENT OF SERVICE, IS AND SHALL REMAIN, PROPERTY OF CROXTON COLLABORATIVE ARCHITECTS. THIS DRAWING SHALL NOT BE REPRODUCED, PUBLISHED, USED ON OTHER PROJECTS, USED FOR ADDITIONS, OR USED IN COMPLETION OF THIS PROJECT BY OTHERS EXCEPT BY AGREEMENT IN WRITING. ©2001 CROXTON COLLABORATIVE ARCHITECTS/ GOULD EVANS ASSOCIATES.

RECEIVED
Centex Rooney Construction Co
DEC 19 2001
Job #317
M. E. Rinker Sr. Hall, UF

NO.	ISSUE/REVISION	DATE

100% CONSTRUCTION DOCUMENTS

DRAWING NAME
SITE UTILITY DETAILS AND SYMBOLS

DATE 11/21/01
DRAWING NUMBER SU-1
SCALE NO SCALE
DRAWN BY/CHECKED BY PH

G:\1440\Plantemp\1440-SU1.dwg Oct 25, 2001 - 11:55:16 nopostol